THIS DRAWING IS UNPUBLISHED. RELEASED FOR PUBLICATION -,- .
© COPYRIGHT - By - ALL RIGHTS RESERVED.

LOC	DIST
AF	50

REVISIONS

P	LTR	DESCRIPTION	DATE	DWN	APVD
	2	ECR-15-005665	10AUG2015	BDA	PKS

1 CONTINUOUS STRIP ON REELS WITH TERMINALS LOCATED ON 6.86±0.08 [.270±.003] CENTERS

2 SLOT ACCEPTS 0.91-1.15mm [#19-#17] AWG COPPER MAGNET WIRE.
SLOT ACCEPTS 0.95-1.15mm [#18.5-#17] AWG ALUMINUM MAGNET WIRE.
ALUMINUM WIRE RANGE APPLIES FOR POST-TIN PLATED VERSIONS ONLY.
ONE WIRE MAX PER SLOT.

3 IDENTIFICATION NUMBER 24 FOR THE MAGNET WIRE SLOT SIZE.

4 0.25 [.010] MAX CARRIER CUT-OFF

5 PRELIMINARY - NOT FOR PRODUCTION

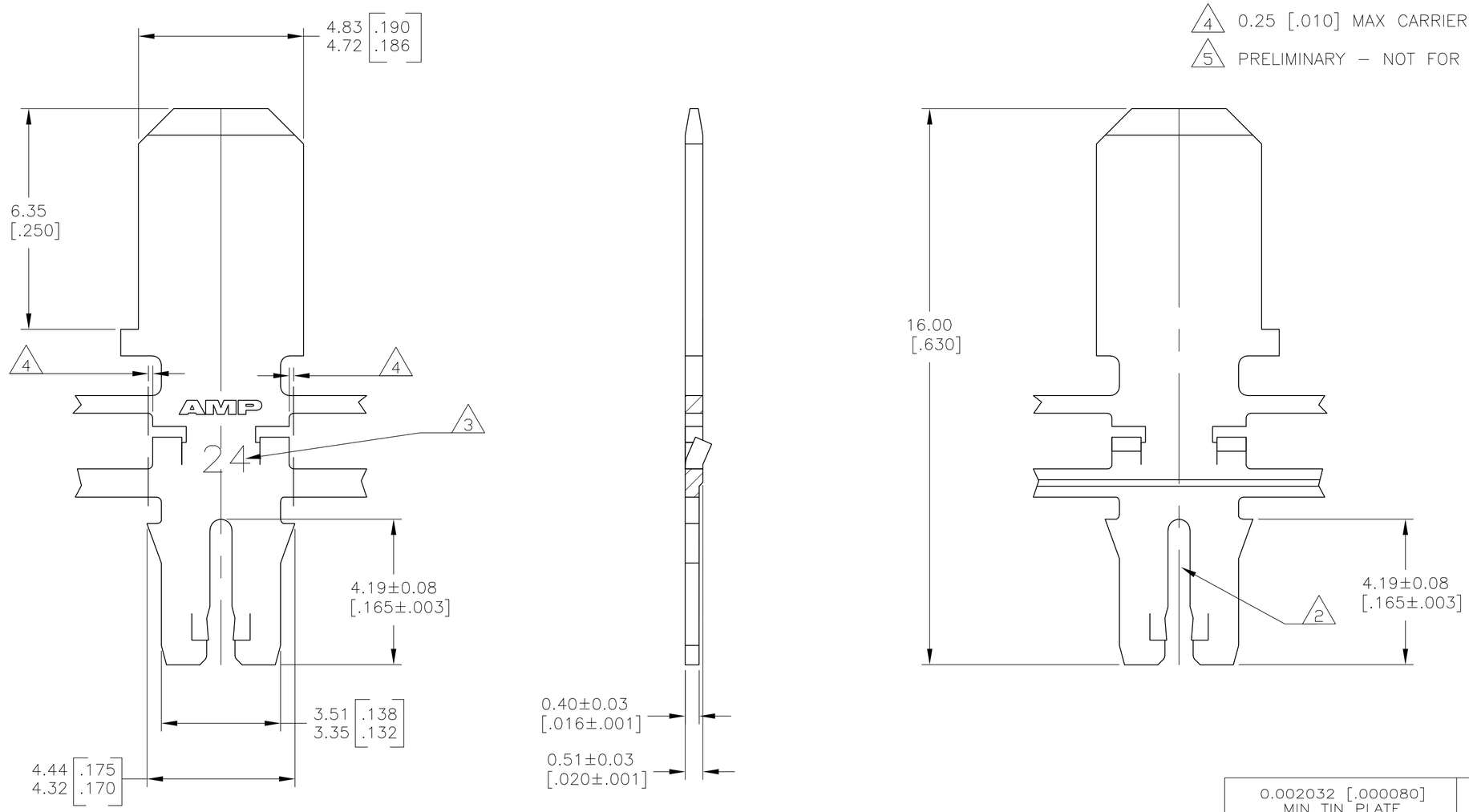

0.002032 [.000080] MIN TIN PLATE	082 PRE-MILLED BRASS	5 1742861-1
FINISH	MATERIAL	PART NO.

THIS DRAWING IS A CONTROLLED DOCUMENT.

DIMENSIONS: MM [INCHES]

TOLERANCES UNLESS OTHERWISE SPECIFIED:

0 PLC	±	-
1 PLC	±	-
2 PLC	±	0.13 [.005]
3 PLC	±	-
4 PLC	±	-
ANGLES	±	-

MATERIAL: SEE TABLE

FINISH: SEE TABLE

DWN JR RUTH 27OCT10
CHK KURT RANDOLPH 27OCT10
APVD KURT RANDOLPH 27OCT10
PRODUCT SPEC 108-1484
APPLICATION SPEC 114-2140
WEIGHT -

TE Connectivity

PRELIMINARY

NAME TAB, 4.75 [.187] PLAIN, MAG-MATE™ Slim Line -

SIZE	CAGE CODE	DRAWING NO	RESTRICTED TO
A2	00779	C-1742861	-

CUSTOMER DRAWING | SCALE 10:1 | SHEET 1 OF 1 | REV 2

1742861